DATA SHEET

CYBELEC
INFRANOR GROUP COMPANY

Numerical control

ModEva 15T

ModEva 15T is designed to control high-end synchronized press brakes with up to 18 axes, of which 2 are synchronized hydraulic axes.

ModEva 15T is composed of 2 main elements:

- A programming console with a large touchscreen and a traditional keypad located within the operator's reach, generally fixed to a swiveling arm.
- A CNC rack, placed inside the electric cabinet.

ModEva 15T system software gives manufacturers the ability to configure axes, inputs/outputs and auxiliary functions according to their needs.

As a member of the ModEva family, ModEva 15T's hardware is compatible with other ModEva numerical controls: same wiring, same signals, same electronic interface, same commissioning procedures.

ModEva 15T operates with the latest evolution of the classic ModEva interface, including the TouchProfile function, which allows drawing 2D profiles directly on the screen. ModEva 15T can also be optionally equipped with a 3D software.

Standard software specifications

User friendliness

Improved usability thanks to the latest software version, who makes use of all the inherent simplicity and user-friendliness of the touch screen. Large function buttons, vivid colors and pop-up numerical pads with large keys all make for a more productive user experience.

TouchProfile function

Intuitively drawing a profile on the screen for fast and precise 2D program creation. Adjusting the dimensions is easily done by touching the desired angle or length and introducing its value on a pop-up numerical pad with large keys.

Remote control

Installation of any remote control software – free or licensed – of the manufacturer's choice is allowed on the NC.

Beam functions

Easy Indexing function, comprising the capacity to determine if index is passed or not, and consequently inform the operator to move the beam down. The capacity to determine if beam is desynchronized (with 2 switches directly connected to the NC) at start up, and accordingly asks the operator to press foot pedal until the beam is parallel again.

Particularities

- Conversion Inch/mm, TON/TONS etc.
- Force depending of sheet position.
- Measurement of speed, stopping time and leakage of the beam.
- Management of CE safety cycles.
- Interactive display of safety utilities and customized messages.

Memory capacity

- Infinite number of programs, which can be saved in NC memory or directly in Windows®.
- Infinite number of sequences per program.
- Infinite number of punches.
- Infinite number of dies.
- 5 Materials.
- 12 Back-gauge configurations.

© Cybelec S.A. 2017

Axes and bending functions

The elements listed hereafter are available and can be configured in all numerical controls supplied with standard software (within the number of axes and inputs/outputs available).

Standard Axes

- Y1 - Y2 : Synchronized axes for the beam (servo-valves, proportional valves). If a current output is needed, the MSV 402 (see Machine options) becomes necessary.
- X, X1, X2, X5, X6 : Main back gauge axes.
- X1 ABS, X2 REL : Secondary back gauge axes in absolute or relative mode, generally used for motorized finger gauge.
- Z, Z2, Z5, Z6 : Axes for left/right movement of the back gauge. Possibility to program a position clearing movement ("retraction") in Z-axis for faster bending cycles.
- R, R2, R5, R6 : Back gauge height-adjustment axes.
- M1, M2 : Axes for the adjustment / movement of the die.

Pressure

Voltage output 0-10 VDC for pressure valve control. If current control is desired, the MVP 100 (see Machine options) is the solution.

Dynamic crowning

Voltage output 0-10 VDC to adjust the hydraulic crowning. Dynamic correction of the bending table, the beam and axis R position. Calculated not only in relation with force, but also with sheet width. If current control is desired, the MVP 100 (see Machine options) is the solution.

Angle protractor

Y1, Y2 and crowning corrections calculation based on the measure of up to 3 angles on the bend. Free interface for RS232 or wireless communication between Mitutoyo angle protractor (not included) and the NC. Uses a receiver with IBRit-Rf1 type USB interface.

Auxiliary functions F1 to F10

Configurable auxiliary functions (number eventually limited according to the type of function and management). 24 VDC voltage or logical order outputs, with or without position control by means of a potentiometer transducer. Special controls for gauge fingers, bending aids, die movements.

LazerSafe PCSS interface

Allows selecting the safety mode, and checking the LazerSafe's PCSS status and log file.

Conical folds

Comfortable programming for conical folds (requires X, X2 and adapted stop fingers).

Software options

Special axes

- X3, X4, X7, X8, Z3, Z4 : front gauge axes.
- H, H2 : rear sheet support axes (not calculated).
- H3, H4 : calculated front sheet support axes.

Message interpreter

Allows remote control of the NC with commands sent in a file via Network or RS232. Generally used for interfacing with robots, bar code readers, etc.

Tandem operation

Management of 2 or more press brakes coupled together in order to bend sheets too long to be bent with one press.

Bending aids

Management of conventional bending aids, or of simplified mechanic bending aids with 2 axes (AP and H) interpolated with the beam.

Angle measurement

Y1, Y2 and crowning corrections calculated automatically based on the feedback of 1 or 2 stations of sensors (DataM's Laser Check – not included), and applied to the next bend, or in real-time to the current bend. Requires NLR board.

3D software

3D capacities for parts management, from creation to bending.

© Cybelec S.A. 2017

CNC Hardware specifications

The CNC is available in 3 rack sizes depending on the configuration:

CNC/C

Compact rack version. With NMX and NSX boards, allows controlling 2, 4 or 6 axes (Y1, Y2 and 2 or 4 electrical axes).

With NCX CANopen axis controller board, allows controlling up to 18 axes (Y1, Y2 and 16 electrical axes).

CNC/M

Medium rack version. With NMX and NSX boards, allows controlling 4, 6, 8, 10 or 12 axes (Y1, Y2 and 10 electrical axes).

With NCX CANopen axis controller board, allows controlling up to 18 axes (Y1, Y2 and 16 electrical axes).

CNC/L

Large rack version, up to 18 axes. A specially large rack version available upon request.

Definitions

Hydraulic axes – NPU board

Analog axes especially intended for controlling the beams (Y1-Y2), controlled by the NPU board.

Analog axes – NMX/NSX boards

NMX master board can control 2 analog axes, and up to 3 NSX slave boards, each of which being able to control 2 additional analog axes. Speed command is provided to the axis drive in the form of a ±10VDC voltage and some digital signals. Axis position is provided to the NMX/NSX board by an incremental encoder as a quadrature signal.

CANopen axes – NCX board

An NCX board can control up to 8 axes depending on the options. It provides motion commands and receives position information from the axis drives via a CAN bus abiding to CANOpen conventions. This board can handle various protocols according to the type of servo-amplifier used. It is possible to combine NCX and NMX/NSX boards, in order to combine CANopen and analog axes. ModEva 15T accepts up to 2 NCX boards.

Please contact Cybelec before ordering if you consider CAN for your axes.

© Cybelec S.A. 2017

CNC Axes Configuration

Rack version	C (Compact)		M (Medium)					
No. of axis boards	2		5					
Axis position (slot N°)	0	1	0	1	2	3	4	5
Most common configurations	NMX	-	NMX	NSX	NSX			
	NMX	NSX	NMX	NSX	NSX	NSX		
	NMX	NLR	NMX	NSX	NSX	NLR		
	NCX	-	NMX	NSX	NSX	NSX	NLR	
	NCX	NLR	NCX	NLR			NMX	NSX
	NCX	NCX	NCX	NCX	NLR			

Technical Characteristics - Console

Screen	15" TFT
Keypad	41 keys
Resolution	1024x768
Touch screen	Yes
USB port	1 x USB 2.0
Power	Through the panel link
Seal	IP 54
P-Link	2 cables RJ45 twisted pair category 6. Cables 5 m or 10 m with Cybelec repeater.
Handle	Included
Operating conditions	Min. 5° Celsius, max. 40° Celsius. Relative humidity 10 to 85% non-condensing. If the ambient temperature approaches or exceeds 40° Celsius, it is advisable to install special ventilation.
EC Directives	EC61131-2 type 1-3
Available languages	CH-中文 (Chinese), CZ-Český (Czech), DE-Deutsch (German), DK-Dansk (Danish), ES-Español (Spanish), FI-Suomi (Finnish), FR-Français (French), GB-English, GR-Ελληνική (Greek), HU-Magyar (Hungarian), IT-Italiano (Italian), KO-한국어 (Korean), NL-Nederlands (Dutch), PL-Polski (Polish), PT-Português (Portuguese), RU-Русский (Russian), SE-Svenska (Swedish), SI-Slovensko (Slovene), TR-Türkçe (Turkish), TW-台灣 (Taiwanese). Language translation modifiable by manufacturer or end-user.
Weight	Approximately 9.6 kg

© Cybelec S.A. 2017

Technical Characteristics - CNC

System	Windows® 7 Embedded	
CPU	AMD Fusion T40R – 1GHz	
RAM	4 GB	
Disk	16 GB flash	
Communication	• 2 RS232 – 1 configurable, e.g. for Lazer Safe's protection devices • 2 PS/2 for mouse or keyboard input • 1 RJ45 Ethernet for network • 1 parallel port (printer) • 1 STD VGA Screen output	
Y1, Y2	NPU board	
Analog axes	2 per board	NMX, NSX boards, according to configuration and rack version. Z_{out} output impedance < 100 Ω , Z_i load ≥ 10 kΩ
CAN axes	NCX boards	Depending on configuration and rack version.
Incremental encoders	5V DC	Line driver, complementary signals are mandatory.
Digital inputs	32	NIN boards, 24 VDC opto-coupled.
Digital outputs	32	NOT boards, 24 VDC "sources". Max 2.5 A / output. Max 6 A / board.
Analog inputs	6	NIN boards. Depending on configuration 0-10, 0-24 VDC A/D 8 bits.
Analog outputs	4	NOT boards, 0-10 VDC (8 bits) for the auxiliary functions, Z_{out} output impedance < 100 Ω , Z_i load ≥ 10 kΩ
Power supply	24 VDC / max 4A ± 15%.	
Seal	Must be installed in an approved electric cabinet.	
Operating conditions	Min. 5° Celsius, max. 40° Celsius. Relative humidity 10 to 85% non-condensing. If the ambient temperature approaches or exceeds 40° Celsius, it is advisable to install special ventilation, or even air-conditioning.	
EC Directives	IEC61131-2	
Weight	Rack version C:	approx. 5 kg.
	Rack version M:	approx. 6 kg. Depending on equipment.
	Rack version L:	approx. 7 kg. Depending on equipment.

© Cybelec S.A. 2017

Dimensions

Console alone

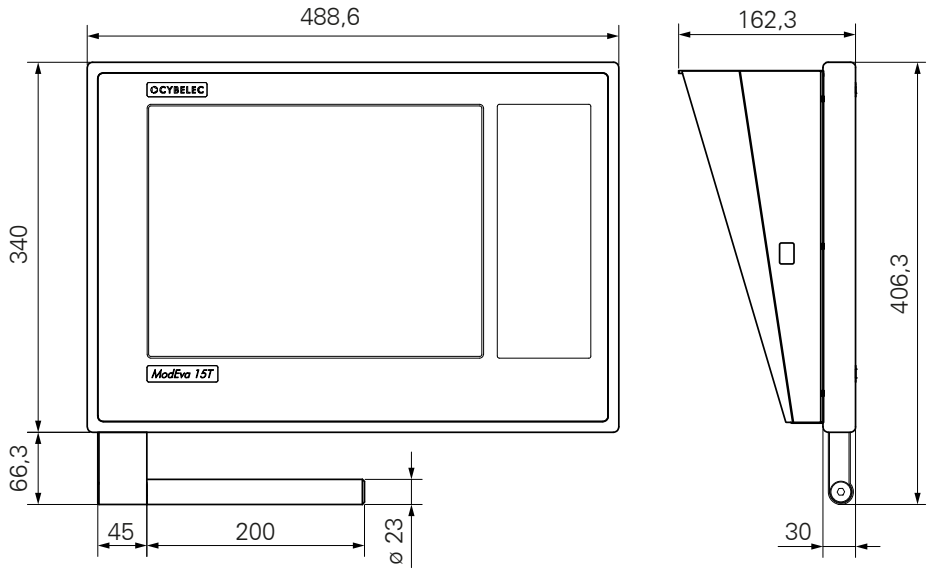

With keyboard support

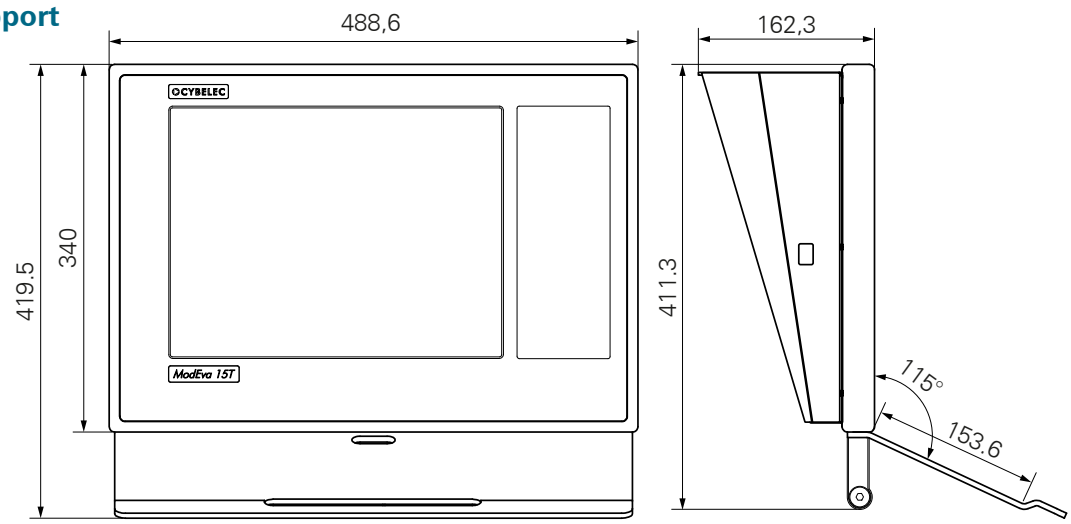

With auxiliary box

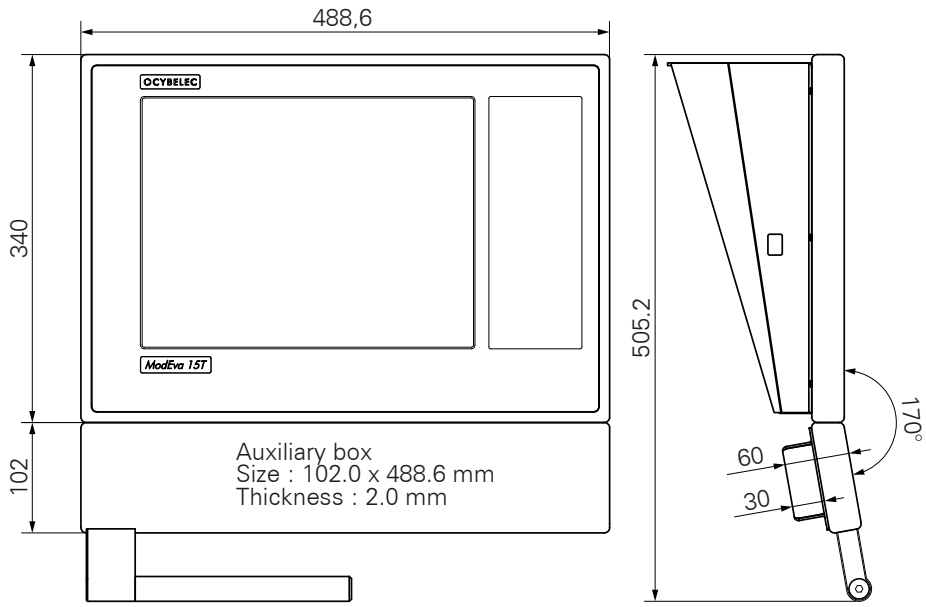

© Cybelec S.A. 2017

With auxiliary box and keyboard support

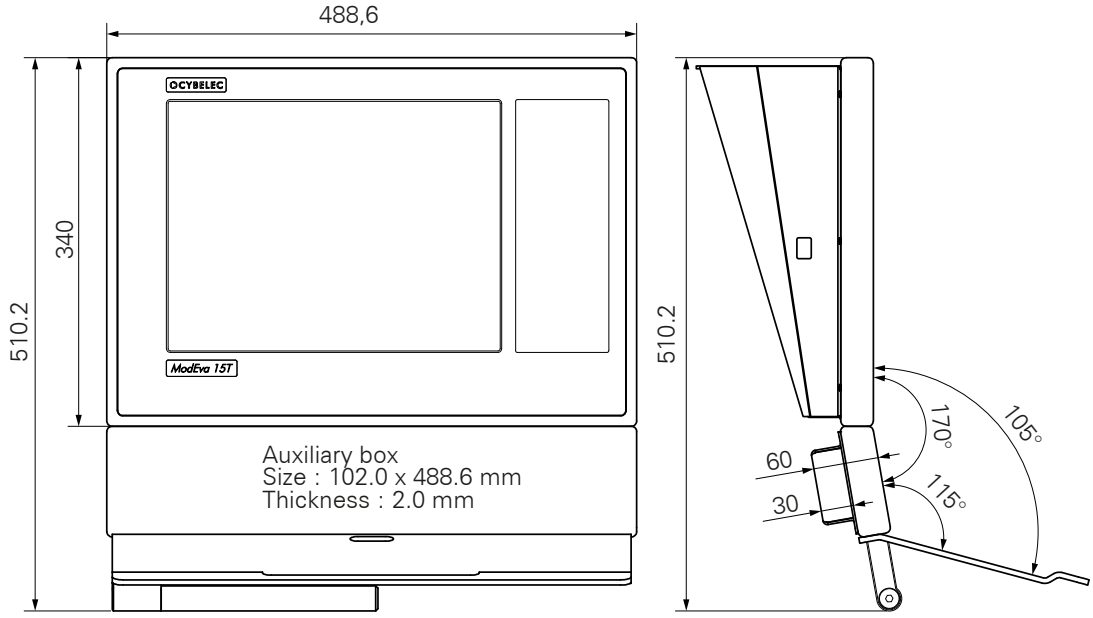

Attachments

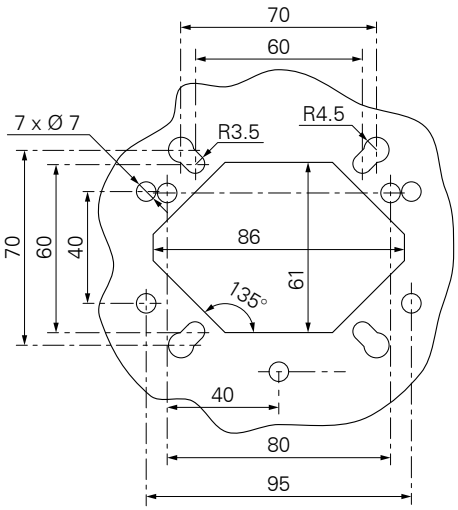

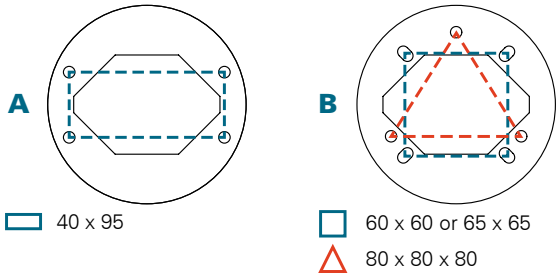

Two adapters are provided.
Stick the appropriate one on top of the box.

Rack dimensions

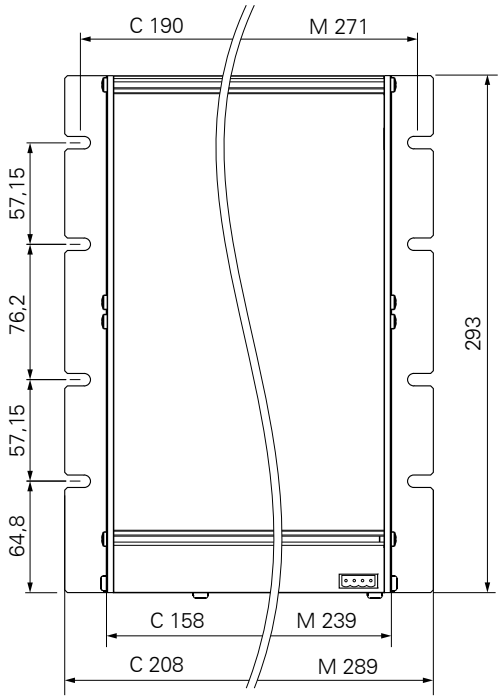

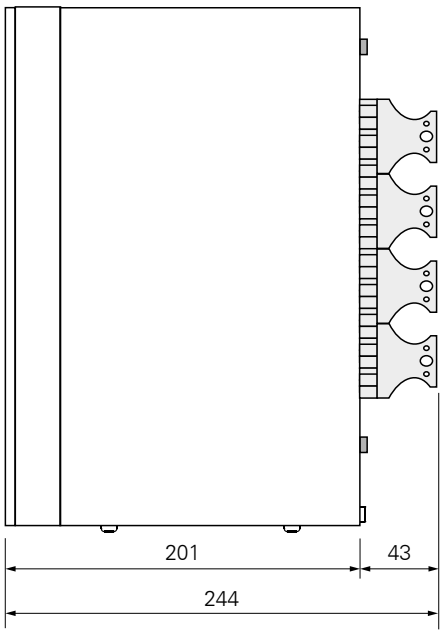

© Cybelec S.A. 2017

Software options

S-OFT-OPT08	Message interpreter
S-OFT-OPT30	Angle measurement 2 points analog interface (NLR board)
S-OFT-OPT38	Rear axes H1 and H2 (sheet support)
S-OFT-OPT42	Conventional bending aids, AP1 to AP4
S-OFT-OPT52	Front axes H3 and H4
S-OFT-OPT60	Angle measurement – one measuring station (NLR board)
S-OFT-OPT65	Angle measurement – two measuring stations (requires option 60)
S-OFT-OPT66	Angle measurement by RS in continuous mode (requires option 60)
S-OFT-OPT74, 75, 76, 78	CANOpen axis (2, 4, 8, 16 axes)
S-OFT-OPT86	Thickness variation compensation: strain gauge
S-OFT-OPT89	Tandem management
S-OFT-OPT90	Combined bending aids and sheet supports (H+AP, etc…)
S-OFT-OPT911	Slave axes
S-OFT-3D	PC-ModEva 3D software, CYCAD and USB key for off-line installation

Machine options

S-OPT-BTAUX-S/E	Auxiliary panel for machine buttons
S-OPT-KBSUP15	Support for external USB keyboard (the keyboard is not provided)
S-OPT-EARTHKITC	Earthing kit for size C rack
S-OPT-EARTHKITM	Earthing kit for size M rack
S-CAH-CybVA6	Interface card for Hoerbiger proportional valves
S-MVP-100/A	Voltage / current conversion module (0-10V → 0.25-0.5 / 0-2 A) for pressure and crowning valves, to be fitted in the electric cabinet.
S-MSV-402/A	Voltage / current conversion module (±10V → ±50 mA, ±300 mA) for servo-valves.
S-OPT-PLCABLE15	Cable, length 15 m with amplifier

Ordering Information

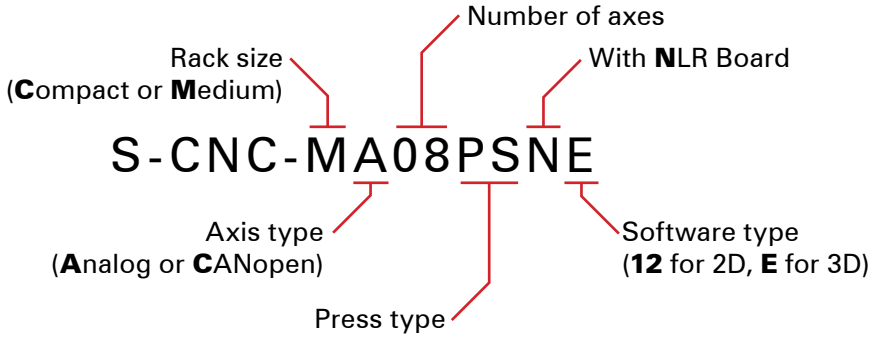

Console

S-MOD-15T

Examples

S-CNC-CA06PS12
S-CNC-MA08PSN12
S-CNC-MA12PSNE

All specifications are subject to modification without notice
ModEva™, all rights reserved
© Cybelec S.A. 2017

Cybelec S.A. • Rue des Uttins 27 • CH-1401 Yverdon-les-Bains • Switzerland
info@cybelec.ch • www.cybelec.ch
Tel. +41 24 447 02 00 • Fax +41 24 447 02 01

CYBELEC
INFRANOR GROUP COMPANY